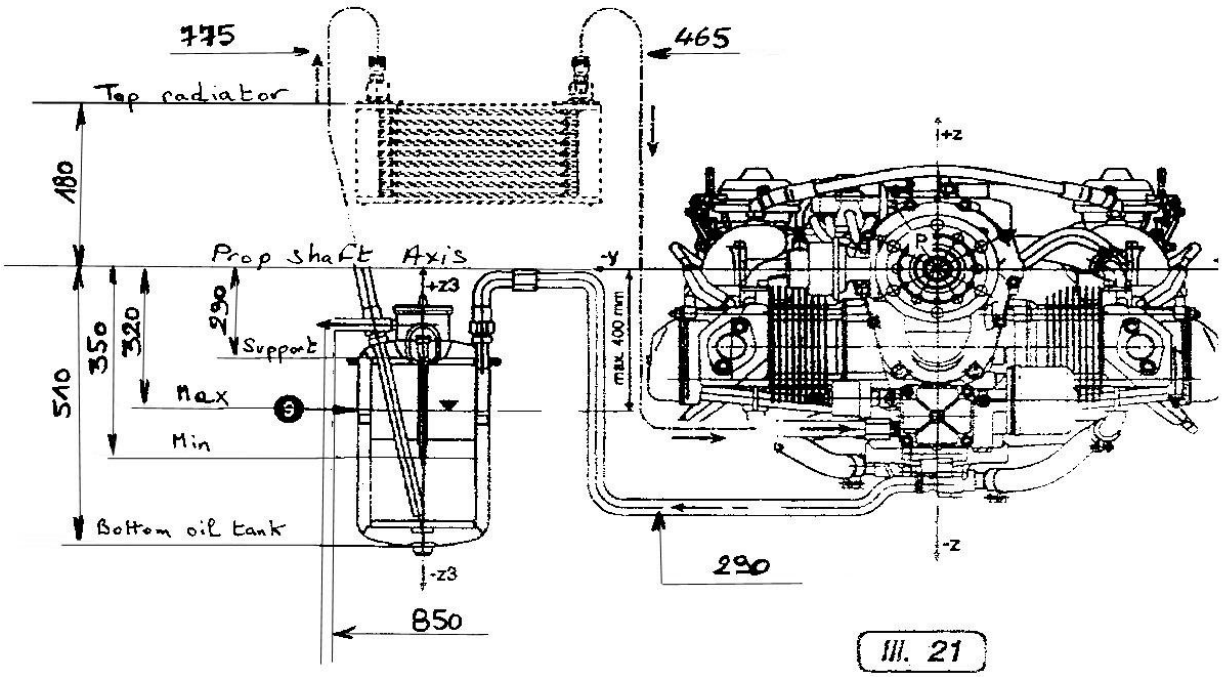

Durites blindées inox ∅ int. 12

ROTAX
ROTAX